REALTREE OUTFITTERS

WESTON PRODUCTS

ATTENTION!

If any components of this unit are broken, do not operate properly, or for product returns, please contact Weston Brands, LLC
Phone: 1-800-814-4895 (Outside the U.S. 216-901-6801)
261 Yadkin Rd., Southern Pines, NC 28387
WestonSupply.com

Realtree AP HD © 2006 Jordan Outdoor Enterprises, Ltd., all rights reserved.

All Trademarks and Registered Trademarks are property of the respective companies.

SAVE THESE INSTRUCTIONS!

Refer to them often and use them to instruct others.

REALTREE OUTFITTERS

WESTON

SPORTSMAN'S ADVANTAGE

VACUUM SEALER

MODEL NO. 65-0501-RT

CAUTION! It is important to follow the "Food Safety" guidelines. For the most up to date instruction visit the USDA website.

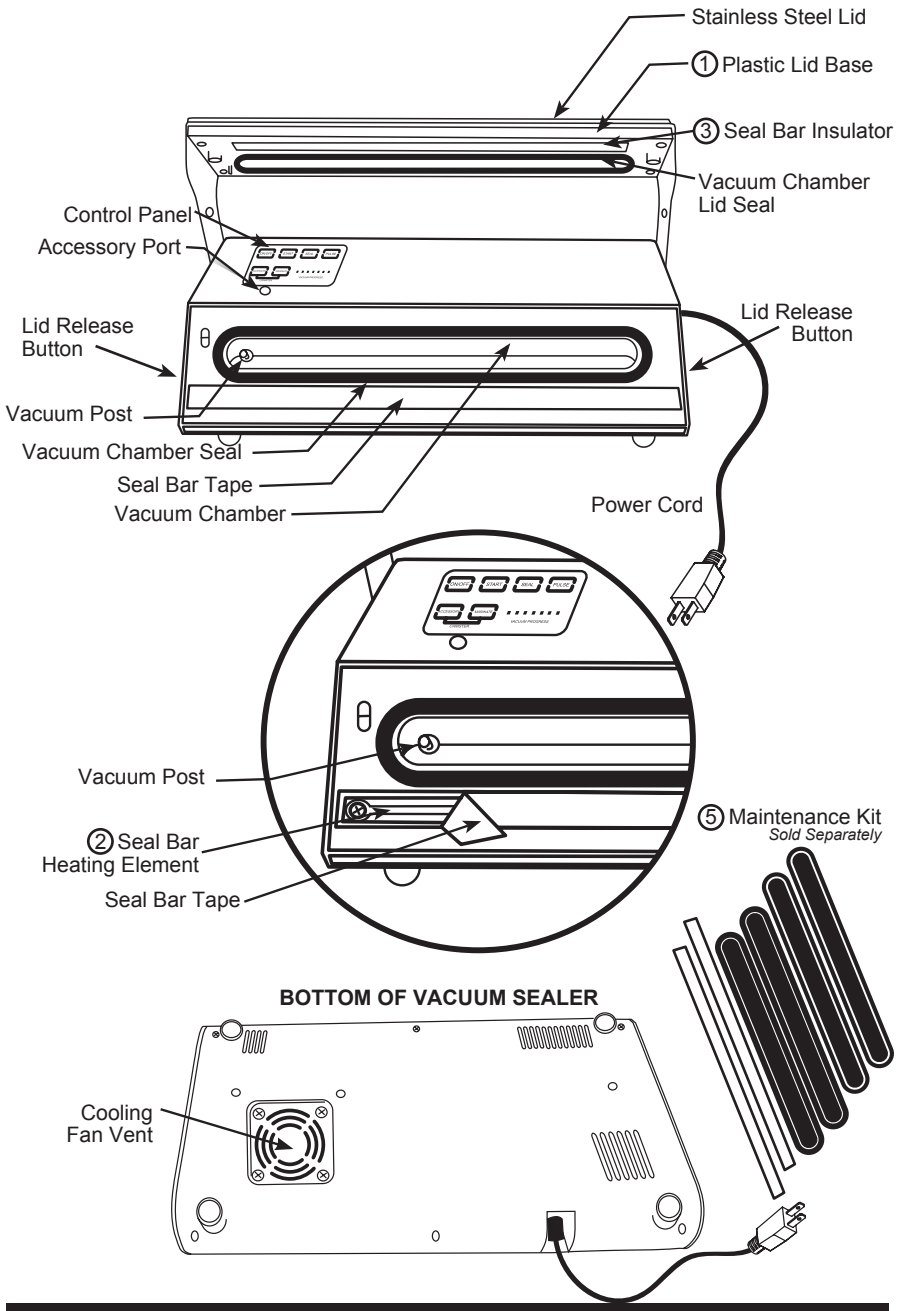

NOTE: The **Vacuum Sealer** is ONLY intended to be used with VACUUM BAGS. For best results, only use the recommended vacuum bags with an embossed or mesh lining. **DO NOT USE HOUSEHOLD BAGS!** Any other uses of the **Vacuum Sealer,** other than the uses described in this booklet, could potentially damage the appliance and void the warranty!

ONE-YEAR LIMITED WARRANTY

This warranty applies to products purchased and used in the U.S. and Canada. This is the only express warranty for this product and is in lieu of any other warranty or condition.

This product is warranted to be free from defects in material and workmanship for a period of one (1) year from the date of original purchase. During this period, your exclusive remedy is repair or replacement of this product or any component found to be defective, at our option. If the product or component is no longer available, we will replace with a similar one of equal or greater value.

This warranty does not cover unauthorized repairs or service to products, products sold “as-is” by retailers, glass, filters, wear from normal use, use not in conformity with the printed directions, or damage to the product resulting from accident, alteration, abuse, or misuse. This warranty extends only to the original consumer purchaser or gift recipient and is not transferable. Keep the original sales receipt, as proof of purchase is required to make a warranty claim. This warranty is void if the product is subjected to any voltage and waveform other than as specified on the rating label (e.g., 120V ~ 60 Hz).

We exclude all claims for special, incidental and consequential damages caused by breach of express or implied warranty. All liability is limited to the amount of the purchase price. **Every implied warranty, including any statutory warranty or condition of merchantability or fitness for a particular purpose, is disclaimed except to the extent prohibited by law, in which case such warranty or condition is limited to the duration of this written warranty.**

This warranty gives you specific legal rights. You may have other legal rights that vary depending on where you live. Some states or provinces do not allow limitations on implied warranties or special, incidental, or consequential damages, so the foregoing limitations may not apply to you.

To make a warranty claim, do not return this appliance to the store. Please call 1.800.814.4895 (001.216.901.6801 outside the US) or visit WestonSupply.com. For faster service, locate the model, type, and series numbers on your appliance.

ADDITIONAL REALTREE® PRODUCTS

Realtree® Single Burger Press	07-0310-RT
Realtree® 3-Slot Mini Burger Press	83-2011-RT
Realtree® #22 Manual Meat Grinder	36-2201-RT
Realtree® #8 Electric Meat Grinder & Sausage Stuffer	33-0801-RT
Realtree® 8 Tray Food Dehydrator	75-0101-RT
Realtree® 7 lb (3 L) Capacity Vertical Sausage Stuffer	73-0701-RT
Realtree® 7 1/2" (19 cm) Meat Slicer	83-0750-RT
Realtree® Manual Meat Tenderizer & Jerky Slicer	07-4101-RT
Realtree® Jerky & Snack Stick Gun	37-0101-RT
Realtree® Ground Meat Packaging Kit	07-1101-RT
Realtree® (100) 3 lb (1.4 kg) Capacity Ground Meat Freezer Bags	07-1004-RT
Realtree® (2 Rolls) 3/8" x 180 yards (1 cm x 164.5 M) Bag Neck Sealing Tape	11-0103-RT
Realtree® Freezer Paper Kit	83-4030-RT
Realtree® 18" x 300' (45.7 cm x 91 M) Roll Freezer Paper	83-4010-RT
Realtree® (4 Rolls) 3/4" x 44 yards (1.9 cm x 40.2 M) Low Temp Adhesion Freezer Tape	11-0203-RT

These products and many more products can be ordered by visiting
WestonSupply.com or by calling
Weston Brands, LLC Toll Free at 1-800-814-4895
Monday thru Friday 8:00am-5:00pm EST. Outside the U.S. call 216-901-6801

COMPONENT LIST

DIAGRAM NO.	PART DESCRIPTION	PART NUMBER
1	Lid Assembly *Includes: Plastic Lid Base, 4 Lid Screws, 2 Release Buttons, 2 Springs, Vacuum Chamber Lid Seal (Black) and Seal Bar Insulator(White)*	65-0512
2	Seal Bar Heating Element	65-0513
3	Seal Bar Insulator (White) *Sold Separately*	65-0511
4	Bonus Vacuum Bag Kit *Not Shown* *Includes: (5) 6" x 10", (5) 8" x 12" and (5) 11" x 16" Bags*	30-0301-K
5	Maintenance Kit *Sold Separately* *Includes: 2 Vacuum Chamber Seals, 2 Seal Bar Tape, and 2 Vacuum Chamber Lid Seals (with Adhesive Back)*	65-0510
Not Shown	Realtree AP™ Camo Storage Cover *Not Shown*	65-0501-RTC

If any components of this unit are broken, the unit does not operate properly or you need a replacement instruction manual, visit us on the web at
WestonSupply.com/support
Or call Weston Brands, LLC Toll Free at 1-800-814-4895
Monday thru Friday 8:00am-5:00pm EST. Outside the U.S. call 216-901-6801

ADDITIONAL ACCESSORIES AVAILABLE

Quart 8" x 12" 100 Count Vacuum Bags	30-0101-RT
Gallon 11" x 16" 100 Count Vacuum Bags	30-0102-RT
Multi-Pack Vacuum Bags Includes (25 Bags) 6" x 10", (10 Bags) 11" x 16", (15 Bags) 8" x 12"	30-0107-RT
(3 Rolls) 8" x 22' Rolls Vacuum Bags	30-0201-RT
(3 Rolls) 11" x 18' Rolls Vacuum Bags	30-0202-RT
1-1/2 & 2 Quart Vacuum Canister Set	65-0505-RT

These products and many more products can be ordered by visiting
WestonSupply.com or by calling
Weston Brands, LLC Toll Free at 1-800-814-4895
Monday thru Friday 8:00am-5:00pm EST. Outside the U.S. call 216-901-6801

WARNING! Before cleaning, assembling or disassembling the appliance, make sure the appliance is OFF and the PLUG IS REMOVED FROM THE OUTLET/POWER SOURCE!

IMPORTANT SAFETY RULES

WARNING! **READ AND FULLY UNDERSTAND ALL INSTRUCTIONS AND WARNINGS PRIOR TO USING THIS UNIT. YOUR SAFETY IS MOST IMPORTANT! FAILURE TO COMPLY WITH PROCEDURES AND SAFEGUARDS MAY RESULT IN SERIOUS INJURY OR PROPERTY DAMAGE. REMEMBER: YOUR PERSONAL SAFETY IS YOUR RESPONSIBILITY!**

1. **ALWAYS DISCONNECT Vacuum Sealer** from power source before servicing, changing accessories or cleaning the unit.

2. Plug the **Vacuum Sealer** into a standard 120 Volt, 60 Hz wall outlet. Avoid using extension cords.

3. **DO NOT USE** the **Vacuum Sealer** if the **Power Cord, Plug** or any other parts are damaged. If the **Power Cord** or the **Vacuum Sealer** is damaged, call Customer Service. **DO NOT ATTEMPT TO REPLACE THE CORD.** Be sure to not allow the **Power Cord** to drape into your work area. Check that all parts are operating properly, and perform the intended functions. Check for any other conditions that may affect the operation.

4. **NEVER** use any accessories or parts from other manufacturers. Doing so will VOID YOUR WARRANTY and may cause fire, electrical shock or injury.

5. To reduce risk of unintentional starting, make sure the **Power Switch** is in the "OFF" position before attaching to the power source.

6. KEEP FINGERS CLEAR of the **Heat Sealing Bar** and **Seal Bar Tape AT ALL TIMES**, these areas become HOT. Doing so may cause serious injury.

7. **DO NOT** take this appliance apart; doing so will **VOID YOUR WARRANTY** and may result in personal injury.

8. **DO NOT** block the **Fan Vent** on the bottom of the **Vacuum Sealer**. Keep the area clear to allow for proper air circulation.

9. TO PROTECT AGAINST RISK OF ELECTRICAL SHOCK: **DO NOT** SUBMERGE THE **VACUUM SEALER** INTO WATER OR LIQUID. BE SURE THE **VACUUM SEALER** IS DISCONNECTED FROM THE POWER SOURCE BEFORE CLEANING. Follow the *"Cleaning Instructions"* in this booklet. **NEVER** rinse **Vacuum Sealer** under tap.

10. **NEVER LEAVE THE VACUUM SEALER UNATTENDED.** Be safe, **DISCONNECT** the **Vacuum Sealer** from power source before leaving the work area and when work is complete. Close supervision is necessary when any appliance is used near children. This appliance is **NOT** to be used by children.

11. Be sure the **Vacuum Sealer** is on a stable work surface. Be sure all the **Vacuum Sealer Feet** are stable.

12. **DO NOT** use the **Vacuum Sealer** outdoors.

13. **DO NOT** use the **Vacuum Sealer** while under the influence of drugs, medications or alcohol.

14. The **Vacuum Sealer** is ONLY intended to be used with VACUUM BAGS. For best results, only use the recommended vacuum bags. **DO NOT USE HOUSEHOLD BAGS!** Any other uses of the **Vacuum Sealer,** other than the uses described in this booklet, could potentially damage the appliance and void the warranty!

SAVE THESE INSTRUCTIONS!

Refer to them often and use them to instruct others.

NOTE: The **Vacuum Sealer** is ONLY intended to be used with VACUUM BAGS. For best results, only use the recommended vacuum bags with an embossed or mesh lining. **DO NOT USE HOUSEHOLD BAGS!** Any other uses of the **Vacuum Sealer,** other than the uses described in this booklet, could potentially damage the appliance and void the warranty!

2 hours - 1 hour if the ambient temperature is 90°F (32°C) or above. When packing for a picnic, make sure the foods are already chilled when they go into the insulated hamper. The hamper won't chill food - it just keeps food cold when properly packed with ice. Hot cooked foods should be placed in shallow containers and immediately refrigerated so they cool rapidly. Make sure to cover foods after they are cool.

NOTE: Special considerations must be made when using venison or other wild game, since it can become heavily contaminated during field dressing. Venison is often held at temperatures that could potentially allow bacteria to grow, such as when it is being transported. Refer to the USDA Meat and Poultry Department for further questions or information on meat and food safety.

CAUTION! It is important to follow the "Food Safety" guidelines. For the most up to date instruction visit the USDA website.

FOOD SAFETY

There are basic rules to follow when handling food.
They are **COOK, SEPARATE, CLEAN,** and **CHILL.**

COOK
It's crucial to cook food to a safe internal temperature to destroy bacteria that is present. The safety of hamburgers and other foods made with ground meat has been receiving a lot of attention lately, and with good reason. When meat is ground, the bacteria present on the surface is mixed throughout the ground mixture. If this ground meat is not cooked to at least 160°F to 165°F (71°C to 74°C), bacteria will not be destroyed and there's a good chance you will get sick.

Solid pieces of meat like steaks and chops don't have dangerous bacteria like E. coli on the inside, so they can be served more rare. Still, any beef cut should be cooked to an internal temperature of at least 145°F (63°C) (medium rare). The safe temperature for poultry is 180°F (82°C) and solid cuts of pork should be cooked to 160°F (71°C). Eggs should be thoroughly cooked too. If you are making a meringue or other recipe that uses uncooked eggs, buy specially pasteurized eggs or use prepared meringue powder.

SEPARATE
Foods that will be eaten uncooked and foods that will be cooked before eating MUST ALWAYS be separated. Cross-contamination occurs when raw meats or eggs come in contact with foods that will be eaten uncooked. This is a major source of food poisoning. Always double-wrap raw meats and place them on the lowest shelf in the refrigerator so there is no way juices can drip onto fresh produce. Then use the raw meats within 1-2 days of purchase, or freeze for longer storage. Defrost frozen meats in the refrigerator, not on the counter.

When grilling or cooking raw meats or fish, make sure to place the cooked meat on a clean platter. Don't use the same platter you used to carry the food out to the grill. Wash the utensils used in grilling after the food is turned for the last time on the grill, as well as spatulas and spoons used for stir-frying or turning meat as it cooks.

Make sure to wash your hands after handling raw meats or raw eggs. Washing hands with soap and water, or using a pre-moistened antibacterial towelette is absolutely necessary after you have touched raw meat or raw eggs. Not washing hands and surfaces while cooking is a major cause of cross-contamination.

CLEAN
Wash your hands and work surfaces frequently when you are cooking. Washing with soap and warm water for at least 15 seconds, then dry with a paper towel.

CHILL
Chilling food is very important. The danger zone where bacteria multiply is between 40°F and 140°F (4°C and 6°C). Your refrigerator should be set to 40°F (4°C) or below; your freezer should be 0°F (-17°C) or below. Simple rule: serve hot foods hot, cold foods cold. Use chafing dishes or hot plates to keep food hot while serving. Use ice water baths to keep cold foods cold. Never let any food sit at room temperature for more than

PROTECTIVE TAPE

There is one factory installed strip of Seal Bar Tape on the Vacuum Sealer.

DO NOT REMOVE THE TAPE!

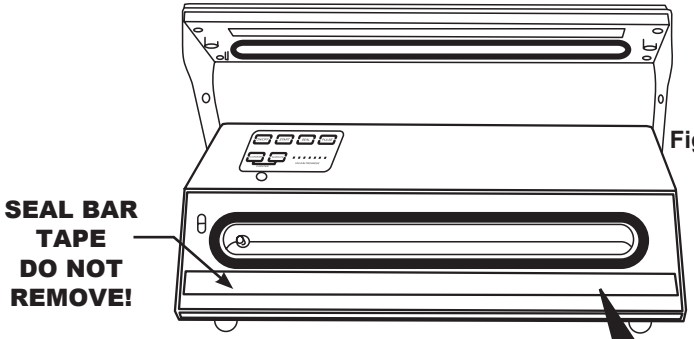

Figure 1

The **Seal Bar Heating Element** is covered with **Seal Bar Tape** to protect vacuum bags during sealing (Figure 1). DO NOT remove the **Seal Bar Tape**. See the "Service Instructions" section of this manual for information on replacing the **Seal Bar Tape**, if necessary.

CLEANING INSTRUCTIONS

! WARNING! Before cleaning, assembling or disassembling the appliance, make sure the appliance is OFF and the PLUG IS REMOVED FROM THE OUTLET/POWER SOURCE!

1. Press the **ON/OFF Button** on the **Control Panel** to turn the **Vacuum Sealer** "OFF".

2. Disconnect the **Vacuum Sealer** from the power supply.

3. Make sure the **Vacuum Sealer** is completely cool.

4. **NEVER IMMERSE the Vacuum Sealer in water or other liquid.** Wipe clean all outside surfaces including the **Vacuum Chamber** and **Vacuum Lid** with a damp cloth or paper towel. Most household spray cleaners are safe to use. Avoid spraying directly into the vent on the left side of the unit. DO NOT use abrasive cleansers or steel wool!

NOTE: Be careful while cleaning not to peel or damage the strip of **Seal Bar Tape** covering the **Seal Bar Heating Element** .

5. Dry all surfaces and close the **Vacuum Lid** before storing the **Vacuum Sealer**.

VACUUM CHAMBER SEALS

The **Vacuum Chamber Seal** may wear over time and require replacement. See the *"Service Instructions"* section of this manual for information on replacing the **Vacuum Chamber Seal**, if necessary (Figure 2).

Figure 2

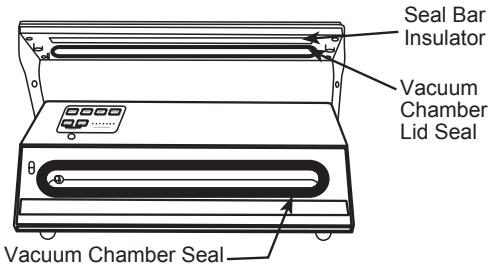

COOLING FAN

The **Vacuum Sealer** has an **Internal Cooling Fan** that runs whenever the unit is plugged in and turned on. To save energy, turn the unit "OFF" and unplug the **Power Cord** when not in use.

Do not block the **Fan Vent** (Figure 3) on the bottom of the **Vacuum Sealer**. Keep the area clear to allow for proper air circulation.

Figure 3

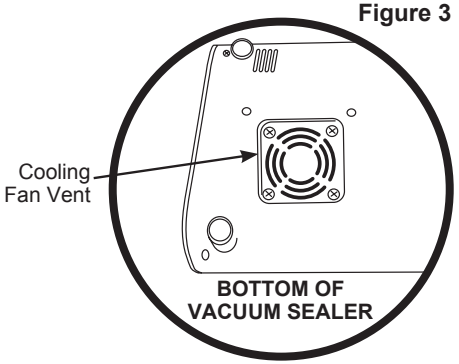

NOTE: The **Vacuum Sealer** is ONLY intended to be used with VACUUM BAGS. For best results, only use the recommended vacuum bags with an embossed or mesh lining. **DO NOT USE HOUSEHOLD BAGS!** Any other uses of the **Vacuum Sealer,** other than the uses described in this booklet, could potentially damage the appliance and void the warranty!

VACUUM PACKAGING GUIDELINES

Very Moist Foods: It is best to freeze very moist food items, like fish, before vacuum sealing them. The excessive moisture can interfere with the **Sealing Bar's** ability to completely fuse the layers of the bag together.

Powdery Items: When vacuum sealing powdery items, like flour, it is best to keep them in their original packaging before putting them into the vacuum bags. The fine powder may get sucked into the **Vacuum Pump** and cause enough damage to shorten the life of your **Vacuum Sealer**. Powdery items may also interfere with the bag sealing function.

Sharp or Pointed Items: When vacuum sealing sharp or pointy items, it is best to cushion the edges so they do not puncture the bag during the vacuum process.

YEAST & BACTERIA

For best results in extending the life of foods, it is important to vacuum package foods that are fresh. Once food has begun to deteriorate, vacuum packaging may only slow the deterioration process. Vacuum sealing cannot completely prevent the growth of mold. Other disease causing microorganisms can still grow in low oxygen environments and may require further measures to be eliminated.

Yeast: The development of yeast can be slowed by refrigeration and completely stopped by freezing food at 0°F (-18°C). Yeast causes fermentation, which will give food an identifiable smell.

Bacteria: Freezing cannot eliminate bacteria, but their growth can be stopped. The growth of bacteria can be easily identified by an offensive odor and sometimes a slimy texture. Some bacteria, like the one that causes botulism, can grow in low oxygen environments and cannot be detected by smell, taste or color. Be sure that all foods are stored and cooked properly before eating.

COOKING & HEATING

- Before microwaving vacuum-packed foods, puncture or open the bag to allow hot air to escape while heating.
- Vacuum-packed foods can be thawed or cooked in boiling water.
- Vacuum-packed perishable foods like meats, vegetables and cheeses must be refrigerated (at or below 34°F (1.1°C)) or frozen, especially acid-free or low-acid foods.

CAUTION! It is important to follow the "Food Safety" guidelines. For the most up to date instruction visit the USDA website.

STORAGE LIFESPAN GUIDELINES

- **IMPORTANT NOTE: Vacuum packaging is NOT a substitute for refrigeration. Vacuum packed perishable foods still require refrigeration.**

- **NEVER** thaw frozen foods at room temperature. Thaw frozen foods in a refrigerator or microwave oven.

- **In general, the colder the temperature at which foods are stored, the longer the shelf life.**

- **Handle vacuum sealer bags with care. Avoid damaging them. A damaged bag will not hold a seal.**

- Only use information in the following chart as a guideline. Refer to the "Vacuum Packaging Guidelines" and "Food Safety" sections of this manual. Actual storage life spans may vary. Check all food for spoilage before use.

FOOD TYPE	STORAGE LOCATION	NORMAL LIFE	VACUUM PACKED LIFE
LARGE CUTS OF MEAT	Freezer	6 months	2-3 years
GROUND MEAT	Freezer	4 months	1 year
FISH	Freezer	6 months	2 years
For best results, freeze meats & fish for 1-2 hours before vacuum packing to help prevent moisture and juices from interfering with the seal of the vacuum bag.			
COFFEE BEANS	Room temperature	4 weeks	16 months
COFFEE BEANS	Freezer	6-9 months	2-3 years
FLOUR, RICE, SUGAR	Room Temperature	6 months	1-2 years
For best results, powder or grainy substances should be kept in their original container or bag, then placed in a vacuum bag for sealing to prevent interfering with the seal of the vacuum bag.			
BERRIES *strawberries, raspberries, blackberries*	Refrigerator	1-3 days	1 week
BERRIES *cranberries, huckleberries, blueberries*	Refrigerator	3-6 days	2 weeks
To prevent berries from being crushed by the vacuum sealer, it is best to freeze item before packing. Spread the berries out on a cookie sheet to allow them to freeze individually. Berries frozen in a large block will be difficult to vacuum seal due to the many small air pockets that would form between the berries.			
CHEESE	Refrigerator	1-2 weeks	4-8 months
If vacuum packed cheese is used often, make sure the vacuum bag is long enough to allow for repeated sealing. For shredded cheese, place a paper towel inside the vacuum bag, on top of the cheese to prevent the cheese from being sucked into the Vacuum Sealer or interfering with the sealing of the bag.			
COOKIES, CRACKERS, BREADS *with periodical opening*	Room Temperature	1-2 weeks	3-6 weeks
Freeze soft airy foods for 1-2 hours prior vacuum packing, to retain shape & texture.			
PASTA, GRAINS, DRIED BEANS	Room Temperature	6 months	1-1/2 years
NUTS	Room Temperature	6 months	2 years
Dried foods with sharp edges should be wrapped in a paper towel or other matter to prevent the sharp edges from puncturing the vacuum bag.			
LETTUCE	Refrigerator	3-6 days	2 weeks
Wash & thoroughly dry leafy vegetables before vacuum packaging.			
VEGETABLES	Freezer	8 months	2 1/2 years
To maximize the taste of vegetables, blanch them before vacuum packaging. Blanching cooks the vegetables very briefly, sealing in the flavor, color and texture, leaving the vegetables cooked but still crisp. Vegetables can be blanched in boiling water in the microwave, most vegetables only require 2-3 minutes (corn on the cob requires 6-11 minutes). Then immerse the vegetables in cold water to stop the cooking process. Dry the vegetables, then vacuum pack.			

Table adapted from Dr. G.K.York, Dept. of Food Science & Tech, U of California, Davis.

CAUTION! It is important to follow the "Food Safety" guidelines. For the most up to date instruction visit the USDA website.

OUTLET INSTRUCTIONS

This appliance has a Polarized Plug (one blade of the plug is wider than the other blade) (Figure 4). To reduce the risk of electrical shock, this plug must fit fully into the outlet. If the blades do not fit into the outlet, try turning the plug around. If the plug still does not fit into the outlet, contact a qualified electrician. DO NOT attempt to modify the plug in any way.

Figure 4

CONTROL BUTTONS (Figure 5)

ON/OFF BUTTON

Press the **ON/OFF Button** to control the main power to the appliance. This can act as a cancel button as well.

START BUTTON

Press the **START Button** to initiate the vacuum sealing process (the **Vacuum Sealer** will automatically seal the bag when a preset vacuum pressure is reached).

SEAL BUTTON

Press the **SEAL Button** during the vacuuming process or when using the **Pulse Button** to initiate the seal (before the preset vacuum pressure is reached). Also used for only sealing vacuum bags without removing the air from the bag.

PULSE BUTTON

The **PULSE Button** manually controls the vacuum pressure when using vacuum bags to vacuum and seal liquids, moist and/or delicate foods to ensure that liquid does not enter the **Vacuum Chamber** or that the item does not crush. **NOTE:** The pulse function will not evacuate all air from the vacuum bags.

ACCESSORY BUTTON

Press the **ACCESSORY Button** when using vacuum canisters to vacuum and seal items stored in the canister.

MARINATE BUTTON

Press the **MARINATE Button** when using vacuum canisters to marinate foods over the course of 10 or 20 minutes.

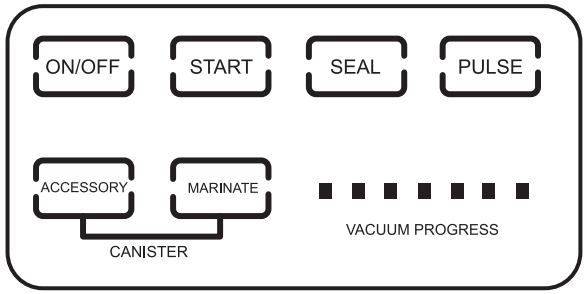

Figure 5

WARNING! Before cleaning, assembling or disassembling the appliance, make sure the appliance is OFF and the PLUG IS REMOVED FROM THE OUTLET/POWER SOURCE!

AUTOMATIC VACUUM & SEAL MODE

1. Attach the **Vacuum Sealer** to the power supply.

2. Press the **ON/OFF Button** (Figure 6) on the **Control Panel** to turn the **Vacuum Sealer** "ON". The **ON/OFF Button** on the display will illuminate and the **Internal Cooling Fan** will run.

3. Press both of the **Lid Release Buttons** (Figure 7) on each side of the **Vacuum Sealer** to release the lid lock, then lift the **Vacuum Lid** to open.

4. Fill the vacuum bag with the product to be vacuum sealed. The open end of the vacuum bag must be clean and dry to seal properly. **HINT:** When filling bags, fold over the top portion of the bag, fill the bag, then unfold the top portion to seal (Figure 8).

5. Place the open end of the bag onto the **Vacuum Chamber Seal** and slightly into the **Vacuum Chamber** (Figure 9). The **Vacuum Post** cannot be blocked or covered by the bag. Make sure there are no wrinkles or creases in the bag in the sealing area.

6. Push down and close the **Vacuum Lid** and lock into place. The open end of the bag should be sandwiched between the **Seal Bar Insulator** and the **Seal Bar Heating Element/Seal Bar Tape**.

7. Press the **START Button** (Figure 6), the **Vacuum Pump** will engage. The **START Button** will remain illuminated while vacuuming.

8. The **SEAL Button** will automatically light up when the bag is sealing. The appliance will

Control Panel **Figure 6**

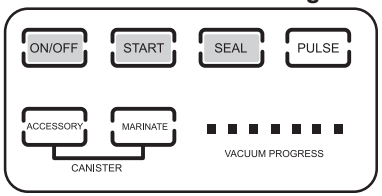

Figure 7

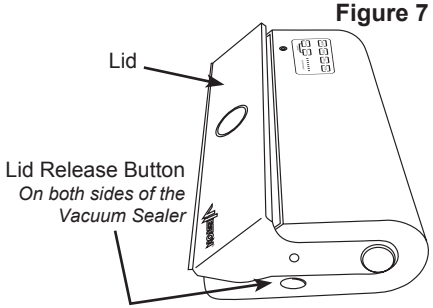

Figure 8

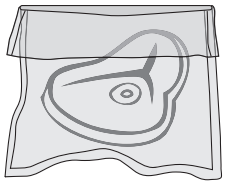

Figure 9

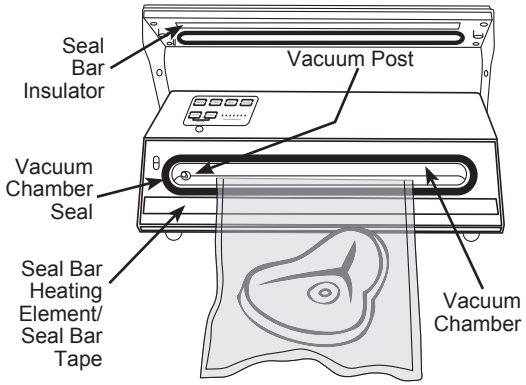

PREPARING VAC BAGS FROM A ROLL

1. Attach the **Vacuum Sealer** to the power supply.

2. Press the **ON/OFF Button** on the **Control Panel** to turn the **Vacuum Sealer** "ON". The **ON/OFF Button** on the display will illuminate and the **Internal Cooling Fan** will run.

3. Press both of the **Lid Release Buttons** on each side of the **Vacuum Sealer** to release the lid lock, then lift the **Vacuum Lid** to open.

4. Cut the vacuum bag to the length you want from a roll.

5. Place one open end of the bag onto the **Vacuum Chamber Seal** and slightly into the **Vacuum Chamber**. The **Vacuum Post** cannot be blocked or covered by the bag. Make sure there are no wrinkles or creases in the bag in the sealing area.

6. Push down and close the **Vacuum Lid** and lock into place. The open end of the bag should be sandwiched between the **Seal Bar Insulator** and the **Seal Bar Heating Element/Seal Bar Tape**.

7. Press the **SEAL Button,** this will engage the **Vacuum Pump** and **Seal Bar Heating Element** and seal the vacuum bag. The **SEAL Button** on the display will illuminate while sealing. The appliance will stop automatically and "BEEP" when the seal process is complete.

8. DO NOT try to open the **Vacuum Lid** before the vacuum has released or unit damage may occur. Press both of the **Lid Release Buttons** on each side of the **Vacuum Sealer** to release the lid lock, then lift the **Vacuum Lid** to open.

9. Remove the newly sealed bag. Wait at least 20 seconds before sealing another bag to avoid overheating the unit.

10. Press the **ON/OFF Button** on the **Control Panel** to turn the **Vacuum Sealer** "OFF".

11. Disconnect the **Vacuum Sealer** from the power supply.

NOTE: The **Vacuum Sealer** is ONLY intended to be used with VACUUM BAGS. For best results, only use the recommended vacuum bags with an embossed or mesh lining. **DO NOT USE HOUSEHOLD BAGS!** Any other uses of the **Vacuum Sealer,** other than the uses described in this booklet, could potentially damage the appliance and void the warranty!

6. Remove the **Plastic Lid Base**, 2 **Release Buttons** and the 2 **Release Springs** from the **Stainless Steel Lid**.

7. To install the new **Lid Assembly**, turn the **Plastic Lid Base** upside down with the **Vacuum Chamber Lid Seal** positioned towards the front of the **Vacuum Sealer** and the **Seal Bar Insulator** facing you.

8. Place the 2 **Release Buttons** into the slots (Figure 20). Insert the 2 **Release Springs** into the backs of the **Release Buttons**.

9. With the **Vacuum Chamber Lid Seal** positioned towards the front of the **Vacuum Sealer** and the **Seal Bar Insulator** facing you, carefully position the **Plastic Lid Base Assembly** back onto the **Stainless Steel Lid** so that the 4 screw holes in the **Plastic Lid Base** line up with the 4 screw posts on the **Stainless Steel Lid.**

Figure 20

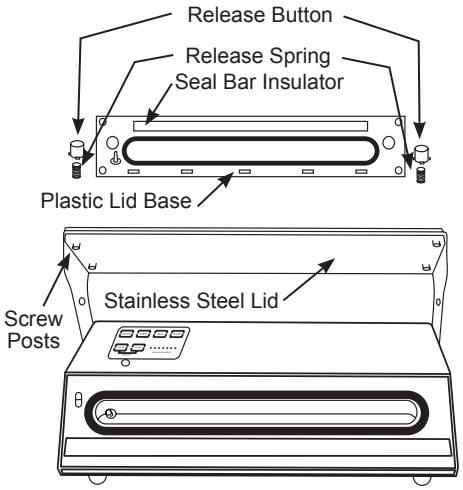

10. Use one hand to hold the **Plastic Lid Base** and the other to insert and turn the **4 Lid Screws. HINT:** It may work better to tilt the **Vacuum Sealer** on its side when installing the **Lid Screws**.

11.When all 4 **Lid Screws** are installed, the **Plastic Lid Base** should be flush to the **Stainless Steel Lid**. If it is not, then the **Lid Screws** may be improperly installed (i.e. crooked or not tight enough).

REPLACING THE SEAL BAR TAPE:

1. Press the **ON/OFF Button** on the **Control Panel** to turn the **Vacuum Sealer** "OFF".

2. Disconnect the **Vacuum Sealer** from the power supply.

3. Make sure the **Vacuum Sealer** is completely cool.

4. Pick at either end of the **Seal Bar Tape** covering the **Seal Bar Heating Element** until it lifts slightly (Figure 18). Grasp the loose end and slowly pull the **Seal Bar Tape** back over itself until fully removed.

Figure 18

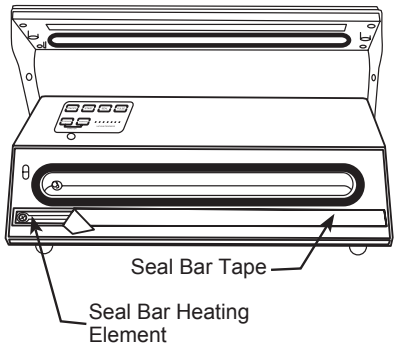

5. Remove the backing from a new strip of **Seal Bar Tape**. Be careful not to allow the **Seal Bar Tape** to contact anything including itself while the adhesive side is exposed.

6. Hold one end of the **Seal Bar Tape** in each hand. Stick the left end of the **Seal Bar Tape** to the flat area on the **Base** just left of the **Seal Bar Heating Element**. Apply the **Seal Bar Tape** from left to right over the **Seal Bar Heating Element**. Make sure there are no wrinkles or folds in the **Seal Bar Tape** once applied. The **Seal Bar Tape** should fully cover the **Seal Bar Heating Element**.

stop automatically and "BEEP" when the vacuum and seal processes are complete. There are a series of seven lights on the bottom right corner of the **Control Panel** (Figure 6) that indicate the **VACUUM/SEAL PROGRESS**.

Press the **ON/OFF Button** to stop the vacuum process at any point.

9. DO NOT try to open the **Vacuum Lid** before the vacuum has released or damage may occur. Press both of the **Lid Release Buttons** (Figure 7) on each side of the **Vacuum Sealer** to release the lid lock, then lift the **Vacuum Lid** to open.

10. Remove the vacuum sealed bag. Wait at least 20 seconds before sealing another bag to avoid overheating the unit.

11. Press the **ON/OFF Button** (Figure 6) on the **Control Panel** to turn the **Vacuum Sealer** "OFF".

11. Disconnect the **Vacuum Sealer** from the power supply before leaving the work area and when work is complete.

WARNING

DO NOT TOUCH the Teflon Tape due to high temperatures. The area that the bags are sealed will be **HOT!** USE CAUTION when inserting and removing bags!

HOT

DO NOT TOUCH!

NOTE: The **Vacuum Sealer** is ONLY intended to be used with VACUUM BAGS. For best results, only use the recommended vacuum bags with an embossed or mesh lining. **DO NOT USE HOUSEHOLD BAGS!** Any other uses of the **Vacuum Sealer,** other than the uses described in this booklet, could potentially damage the appliance and void the warranty!

PULSE/MANUAL SEAL MODE

The **PULSE Button** manually controls the vacuum pressure when using vacuum bags to vacuum and seal liquids, moist and/or delicate foods to ensure that liquid does not enter the **Vacuum Chamber** or that the item does not crush. **NOTE:** The pulse function will not evacuate all air from the vacuum bags.

Control Panel **Figure 10**

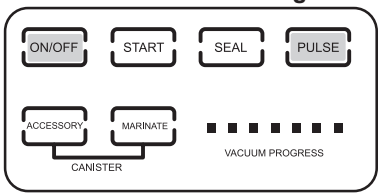

1. Attach the **Vacuum Sealer** to the power supply.

2. Press the **ON/OFF Button** (Figure 10) on the **Control Panel** to turn the **Vacuum Sealer** "ON". The **ON/OFF Button** on the display will illuminate and the **Internal Cooling Fan** will run.

3. Press both of the **Lid Release Buttons** on each side of the **Vacuum Sealer** to release the lid lock, then lift the **Vacuum Lid** to open.

4. Fill the vacuum bag with the product to be vacuum sealed. The open end of the vacuum bag must be clean and dry to seal properly. **HINT:** When filling bags, fold over the top portion of the bag, fill the bag, then unfold the top portion to seal.

5. Place the open end of the bag onto the **Vacuum Chamber Seal** and slightly into the **Vacuum Chamber**. The **Vacuum Post** cannot be blocked or covered by the bag. Make sure there are no wrinkles or creases in the bag in the sealing area.

6. Push down and close the **Vacuum Lid** and lock into place. The open end of the bag should be sandwiched between the **Seal Bar Insulator** and the **Seal Bar Heating Element/Seal Bar Tape**.

7. Press the **PULSE Button** (Figure 10) once. Then press and hold the **PULSE Button** until the desired amount of air is evacuated from the bag.

8. Press the **SEAL Button**, this will engage the **Vacuum Pump** and **Seal Bar Heating Element** and seal the vacuum bag. The **SEAL Button** on the display will illuminate while sealing. The appliance will stop automatically and "BEEP" when the seal process is complete.

9. DO NOT try to open the **Vacuum Lid** before the vacuum has released or damage may occur. Press both of the **Lid Release Buttons** on each side of the **Vacuum Sealer** to release the lid lock, then lift the **Vacuum Lid** to open.

10. Remove the vacuum sealed bag. Wait at least 20 seconds before sealing another bag to avoid overheating the unit.

11. Press the **ON/OFF Button** on the **Control Panel** to turn the **Vacuum Sealer** "OFF".

12. Disconnect the **Vacuum Sealer** from the power supply.

REPLACING THE VACUUM CHAMBER LID SEAL:

1. Press the **ON/OFF Button** on the **Control Panel** to turn the **Vacuum Sealer** "OFF".

2. Disconnect the **Vacuum Sealer** from the power supply.

3. Make sure the **Vacuum Sealer** is completely cool.

4. Press both of the **Lid Release Buttons** on each side of the **Vacuum Sealer** to release the lid lock, then lift the **Vacuum Lid** to open.

5. Remove the **Vacuum Chamber Lid Seal** from the groove in the **Plastic Lid Base** (Figure 18).

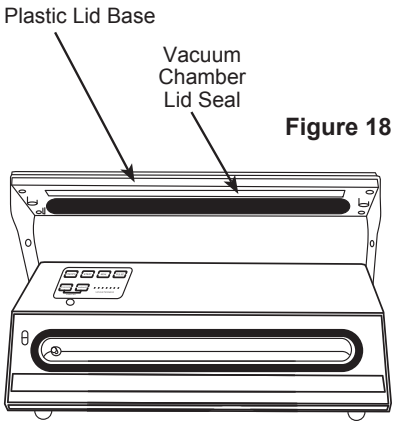

Figure 18

NOTE: The **Vacuum Chamber Lid Seal** has an adhesive backing-if the adhesive does not remove cleanly from the plastic, use a gentle, household adhesive remover. Make sure the surface is dry and oil free before replacing with the new **Vacuum Chamber Lid Seal**.

6. Peel off the backing from the **Vacuum Chamber Lid Seal.** Position the new **Vacuum Chamber Lid Seal** into the groove in the **Plastic Lid Base**.

7. Work the **Vacuum Chamber Lid Seal** into the groove with your fingers until the seal is completely in place and hold for 30 seconds. Wait for 30 minutes before using.

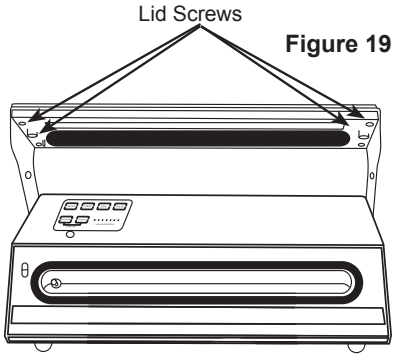

Figure 19

REPLACING THE LID ASSEMBLY:

1. Press the **ON/OFF Button** on the **Control Panel** to turn the **Vacuum Sealer** "OFF".

2. Disconnect the **Vacuum Sealer** from the power supply.

3. Make sure the **Vacuum Sealer** is completely cool.

4. Press both of the **Lid Release Buttons** on each side of the **Vacuum Sealer** to release the lid lock, then lift the **Vacuum Lid** to open.

5. Using a Phillips-head screwdriver, remove the 4 **Lid Screws** in the **Plastic Lid Base** (Figure 19).

NOTE: Short, narrow diameter or angled screwdrivers work best for removing the screws.

10. To test vacuum, gently tug on the canister lid. The lid should not move.

11. To release the vacuum and open the canister, turn the knob/dial on the canister to the open position.

12. Press the **ON/OFF Button** on the **Control Panel** to turn the **Vacuum Sealer** "OFF".

13. Disconnect the **Vacuum Sealer** from the power supply.

SERVICE INSTRUCTIONS

WARNING! Before cleaning, assembling or disassembling the appliance, make sure the appliance is OFF and the PLUG IS REMOVED FROM THE OUTLET/POWER SOURCE!

Some parts of the **Vacuum Sealer** may need replacing after repeated use. A ***Maintenance Kit*** *(Sold Separately)* (Figure 16) may be necessary for the **Vacuum Sealer** to properly function. **NOTE:** Remove the inner foam oval from all of the foam **Chamber Seals**. The foam oval can be discarded, only the outer foam ring is needed (Figure 16a).

Figure 16

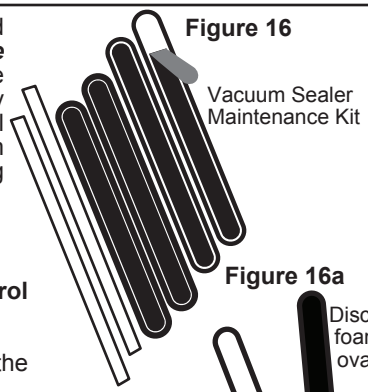

Figure 16a

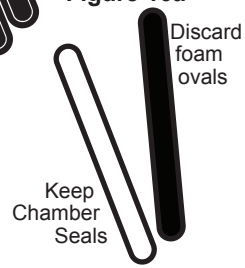

REPLACING THE VACUUM CHAMBER SEAL:

1. Press the **ON/OFF Button** on the **Control Panel** to turn the **Vacuum Sealer** "OFF".

2. Disconnect the **Vacuum Sealer** from the power supply.

3. Make sure the **Vacuum Sealer** is completely cool.

4. Press both of the **Lid Release Buttons** on each side of the **Vacuum Sealer** to release the lid lock, then lift the **Vacuum Lid** to open.

5. Remove the **Vacuum Chamber Seal** *(NOTE: The **Vacuum Chamber Seal** DOES NOT have an adhesive backing.)* (Figure 17) from the groove around the **Vacuum Chamber** on the base of the **Vacuum Sealer**.

6. Position a new **Vacuum Chamber Seal** into the groove around the **Vacuum Chamber** on the base of the **Vacuum Sealer**.

7. Work the **Vacuum Chamber Seal** into the groove until the seal is completely in place.

Figure 17

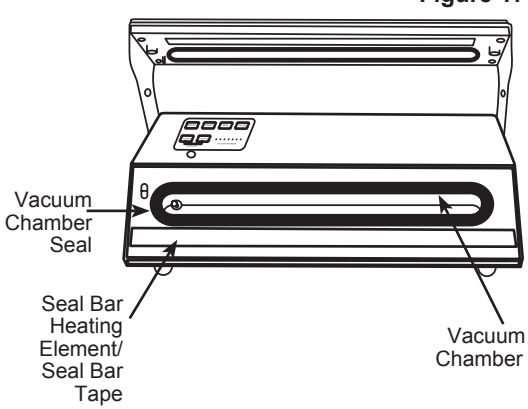

SEAL MODE

Press the **SEAL Button** during the vacuuming process or when using the **Pulse Button** to initiate the seal (before the preset vacuum pressure is reached). Also used for only sealing vacuum bags without removing the air from the bag.

Control Panel **Figure 11**

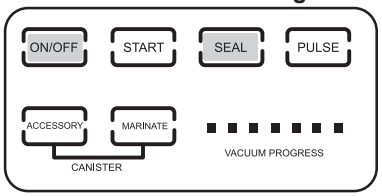

To only seal vacuum bags without removing the air from the bag:

1. Attach the **Vacuum Sealer** to the power supply.

2. Press the **ON/OFF Button** (Figure 11) on the **Control Panel** to turn the **Vacuum Sealer** "ON". The **ON/OFF Button** on the display will illuminate and the **Internal Cooling Fan** will run.

3. Press both of the **Lid Release Buttons** on each side of the **Vacuum Sealer** to release the lid lock, then lift the **Vacuum Lid** to open.

4. Fill the vacuum bag with the product to be sealed. The open end of the vacuum bag must be clean and dry to seal properly. **HINT:** When filling bags, fold over the top portion of the bag, fill the bag, then unfold the top portion to seal.

5. Place the open end of the bag onto the **Vacuum Chamber Seal** and slightly into the **Vacuum Chamber**. The **Vacuum Post** cannot be blocked or covered by the bag. Make sure there are no wrinkles or creases in the bag in the sealing area.

6. Push down and close the **Vacuum Lid** and lock into place. The open end of the bag should be sandwiched between the **Seal Bar Insulator** and the **Seal Bar Heating Element/Seal Bar Tape**.

7. Press the **SEAL Button** (Figure 11), this will engage the **Vacuum Pump** and **Seal Bar Heating Element** and seal the vacuum bag. The **SEAL Button** on the display will illuminate while sealing. The appliance will stop automatically and "BEEP" when the seal process is complete.

8. DO NOT try to open the **Vacuum Lid** before the vacuum has released or damage may occur. Press both of the **Lid Release Buttons** on each side of the **Vacuum Sealer** to release the lid lock, then lift the **Vacuum Lid** to open.

9. Remove the sealed bag. Wait at least 20 seconds before sealing another bag to avoid overheating the unit.

10. Press the **ON/OFF Button** on the **Control Panel** to turn the **Vacuum Sealer** "OFF".

11. Disconnect the **Vacuum Sealer** from the power supply.

NOTE: The **Vacuum Sealer** is ONLY intended to be used with VACUUM BAGS. For best results, only use the recommended vacuum bags with an embossed or mesh lining. **DO NOT USE HOUSEHOLD BAGS!** Any other uses of the **Vacuum Sealer,** other than the uses described in this booklet, could potentially damage the appliance and void the warranty!

VACUUM SEALER CANISTERS *(Sold Separately)*

Vacuum canisters may be used with the **Vacuum Sealer** *(Sold Separately)*. Vacuum canisters come with their own hose.

1. Attach the **Vacuum Sealer** to the power supply.

2. Press the **ON/OFF Button** (Figure 12) on the **Control Panel** to turn the **Vacuum Sealer** "ON". The **ON/OFF Button** on the display will illuminate and the **Internal Cooling Fan** will run.

3. Insert one end of the accessory hose into the **Accessory Port** (Figure 13) on the **Vacuum Sealer**.

4. Insert the other end of the accessory hose into the port on the lid of the canister (Figure 14).

5. Fill the canister with the product to be vacuum sealed.

6. Turn the knob/dial on the canister to the seal position.

Control Panel **Figure 12**

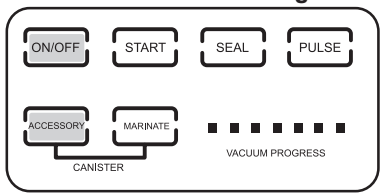

Figure 13

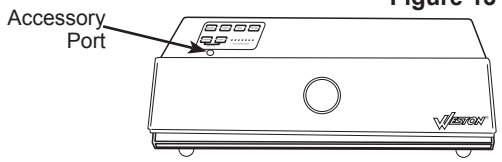

Figure 14

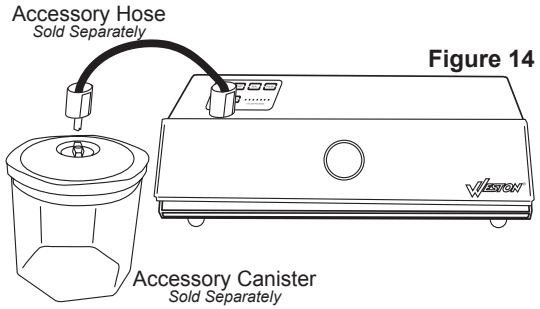

7. Press the **ACCESSORY Button** (Figure 12), this will engage the **Vacuum Pump**. The **ACCESSORY Button** on the display will illuminate while vacuuming. The appliance will stop automatically and "BEEP" when the seal process is complete.

8. Gently remove the accessory hose from both the canister and the **Vacuum Sealer**. Wait at least 20 seconds before vacuuming another canister to avoid overheating the unit. Be careful not to turn the knob/dial of the canister to the open position.

9. To test vacuum, gently tug on the canister lid. The lid should not move.

10. To release the vacuum and open the canister, turn the knob/dial on the canister to the open position.

11. Press the **ON/OFF Button** on the **Control Panel** to turn the **Vacuum Sealer** "OFF".

12. Disconnect the **Vacuum Sealer** from the power supply.

CAUTION! It is important to follow the "Food Safety" guidelines. For the most up to date instruction visit the USDA website.

MARINATING WITH CANISTERS *(Sold Separately)*

Vacuum canisters may be used with the **Vacuum Sealer** *(Sold Separately)*. Vacuum canisters come with their own hose.

1. Attach the **Vacuum Sealer** to the power supply.

2. Press the **ON/OFF Button** (Figure 15) on the **Control Panel** to turn the **Vacuum Sealer** "ON". The **ON/OFF Button** on the display will illuminate and the **Internal Cooling Fan** will run.

Control Panel **Figure 15**

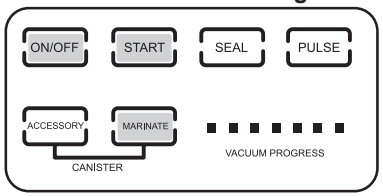

3. Insert one end of the accessory hose into the **Accessory Port** on the **Vacuum Sealer**.

4. Insert the other end of the accessory hose into the port on the lid of the canister.

5. Fill the canister with the product to be marinated.

6. Turn the knob/dial on the canister to the seal position.

7. The **MARINATE Button** (Figure 15) has two settings:

10-MINUTE MARINATE PROCESS: Press the **MARINATE Button** once. There are a series of seven lights on the bottom right corner of the **Control Panel** (Figure 15) that indicate the **VACUUM PROGRESS**. Three lights in the **VACUUM PROGRESS** bar will illuminate. This will engage the **10 Minute Marinate Process**.

a. Press the **START Button** to begin the marinating process.

b. The **Vacuum Sealer** will begin a process of vacuum and rest. The vacuum will start for about 25 seconds, followed by a brief 3 ½ minute rest period. The unit will go through a cycle of (3) 3 ½ minute rests and (3) 7 second vacuum periods.

20-MINUTE MARINATE PROCESS: *For deeper marinade penetration, use the 20-Minute Marinate Process.* Press the **MARINATE Button** twice. There are a series of seven lights on the bottom right corner of the **Control Panel** (Figure 15) that indicate the **VACUUM PROGRESS**. Six lights in the **VACUUM PROGRESS** bar will illuminate. This will engage the **20 Minute Marinate Process**.

a. Press the **START Button** to begin the marinating process.

b. The **Vacuum Sealer** will begin a process of vacuum and rest. The vacuum will start for about 25 seconds, followed by a brief 6 ½ minute rest period. The unit will go through a cycle of (2) 6 ½ minute rests and (2) 7 second vacuum periods. The **Vacuum Sealer** will finish with (1) 3 minute rest period and a 7 second vacuum period.

8. Once the marinating process is complete the **Vacuum Sealer** will "BEEP" and the process will end.

9. Gently remove the accessory hose from both the canister and the **Vacuum Sealer**. Be careful not to turn the knob/dial of the canister to the open position.